1. Rating:

1.1	Voltage Rating:	100VAC
1.2	Current Rating:	1A
1.3	Operation Temperature Range:	-25℃～+85℃
1.4	Storage Temperature Range	-40℃～+85℃
1.5	Operation Relative Humidity	95%R.H. Max.
1.6	Electric Power	1W
1.7	Impedance	50Ω

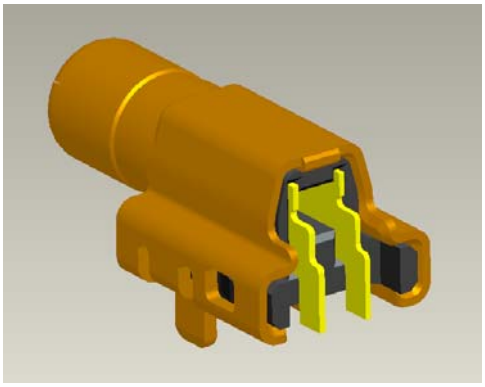

2. Performance

A. Structure

Test Items	Test Method	Standard
Aspect, Structure & Completion	* Measured by visual, Dimension instrument.	* **According of the drawing.**
Visual and dimension inspections	Visual, dimensional and functional per applicable quality inspection plan.	

B. Electrical

Test Items	Test Method		Standard
Insulation resistance	DC 100V		More than 1,000 MΩ
Contact Resistance	10mA(DC or 1,000Hz)		Initial : Less than 100mΩ After Testing : Lass than 200mΩ
Withstanding Voltage	1 min/ Ac 150Vrms		No flashover & No insulation damage
V.S.W.R	Frequency	DC~1000MHz	Normal close 1.3 Max.
			Normal open 1.3 Max.
		1000~3000MHz	Normal close 1.4 Max.
			Normal open 1.4 Max.
		3000~4000MHz	Normal close 1.5 Max.
			Normal open 1.5 Max.
Insertion Loss	Frequency	DC~1000MHz	Normal close 0.2dB Max.
			Normal open 0.3dB Max.
		1000~3000MHz	Normal close 0.3dB Max.
			Normal open 0.4dB Max.
		3000~4000MHz	Normal close 0.5dB Max.
			Normal open 0.6dB Max.

Isolation Loss	Frequency	DC~1000MHz	15dB Min.
		1000~3000MHz	11dB Min.
		3000~4000MHz	10dB Min.

C. Mechanical

Test Items	Test Method	Standard
Suitable	Measured by suitable connector	Without problem when insertion the other connector
Mating life	After 5000 inserted /extracted cycles with suitable connector.(Horizontal direction)	① Contact Resistance : 200mΩ ② No damage, crack or shake
Mechanical Shock Test	MIL-STD-202F Method 213B test condition B Peak acceleration:75G Duration of pules: 6ms Inspected 6 cycles per axis with suitable connector	Contact Resistance : 200mΩ No electrical shut down more than 1μs
Vibration and High Frequency	MIL-STD-202F Method 204D test condition A Peak acceleration:10G Frequency:10~500Hz Amplitude : 1.52mm inspected 12 cycles per axis (total 36 cycles) of full frequency range in 15 minutes /cycle with suitable connector	Contact Resistance : 200mΩ No electrical shut down more than 1μs
Insertion Force of Connector	Measure the insertion force using the application connector.	20N Max. (Horizontal direction)
Withdraw Force of Connector	Measured by push pull gauge	5~15N (Horizontal direction)

D. Environmental

Test Items	Test Method	Standard

Humidity Steady State	MIL-STD-202F method 103B test condition B Humidity : 90~95% Temperature : 40℃ Duration : 96h	① Contact Resistance Center : 200mΩ ② Insulation Resistance More than 1,000MΩ
Test Items	**Test Method**	**Standard**
Temperature Cycles	Inspection of 25 cycle at temperature: 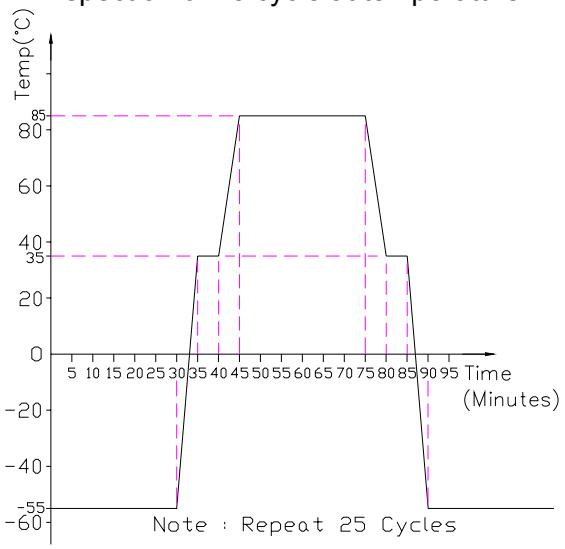	Contact Resistance Center : 200mΩ No Damage, crack or shake Insulation Resistance : More than 1,000MΩ
Life(At elevated ambient temperature)	MIL-STD-202F Method 108A test condition B 100℃ 250 hours	Contact Resistance : 200mΩ Insulation resistance: 1000MΩ No damage, crack or shake
Dry cold test	-40℃ 96Hours	Contact Resistance : 200mΩ Insulation resistance: 1000MΩ No damage, crack or shake
Salt Spray	Density 5% Brine leave for contact 48 hours/shell 24 hours at temperature 35℃	Contact Resistance : 200mΩ Insulation resistance: 1000MΩ No excessive corrosion
Resistance to soldering	Put soldering iron(350℃) on terminal top for 5sec.	Without deformations damage
Solderability	Dip solder tails into the molten solder at 250±2℃ for 3±0.5 sec.	Solder coverage: 95% Minimum
Resistance to soldering Reflow Heat	Infrared the reflow condition of 3-1	No damage after 2 times of reflow Measurement after 24±2 hours

3.Reflow Soldering Temperature

3-1. Lead free Reflow soldering Temperature

REFLOW PROFILE for LEAD FREE Condition

1) Preheating Section
   150~200℃ , 60~180s.
2) Soldering Section
   217℃ or more , 60~150s.
3) Peak Temperature
   260℃ / 10sec.

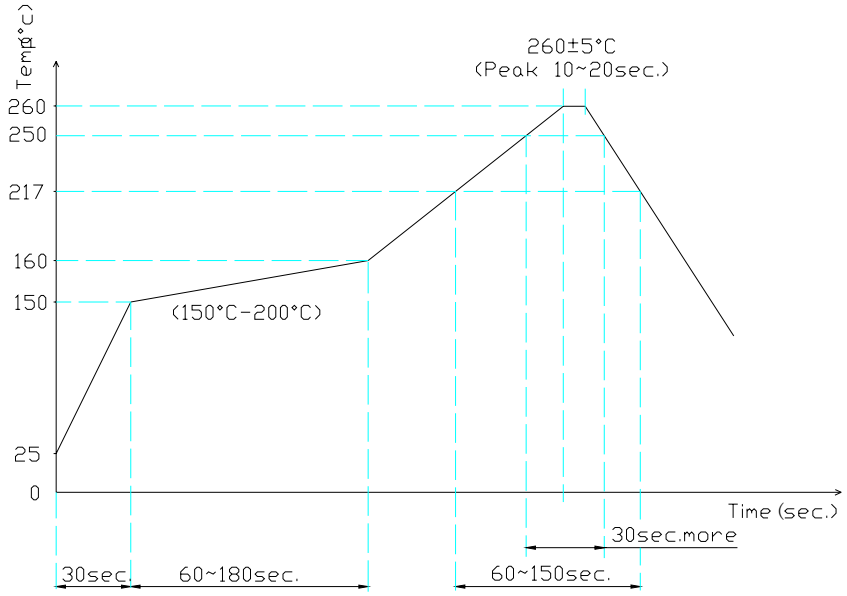

4. Product Dimensions

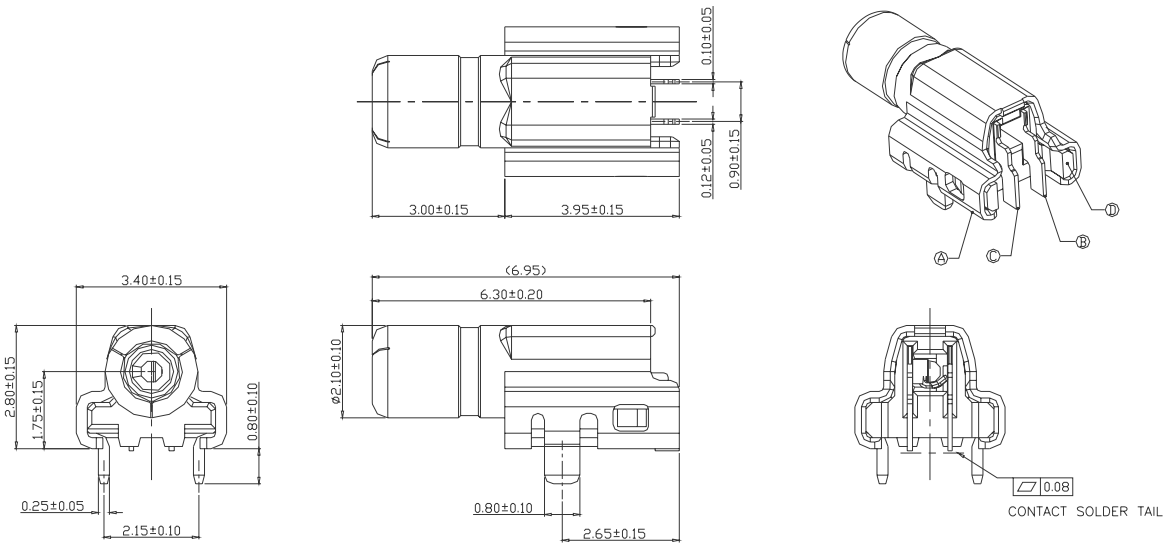

No.	Part Name	Material	Finish	Q'ty
D	HOUSING	Engineering Plastic(LCP)	BLACK,UL 94V-0	1
C	COMMON CONTACT	Copper Alloy	Au PLATED OVER Ni	1
B	NORMAL CLOSE CONTACT	Copper Alloy	Au PLATED OVER Ni	1
A	SHELL	Stainless Steel	Au PLATED OVER Ni	1

5. Board Dimensions Diagram

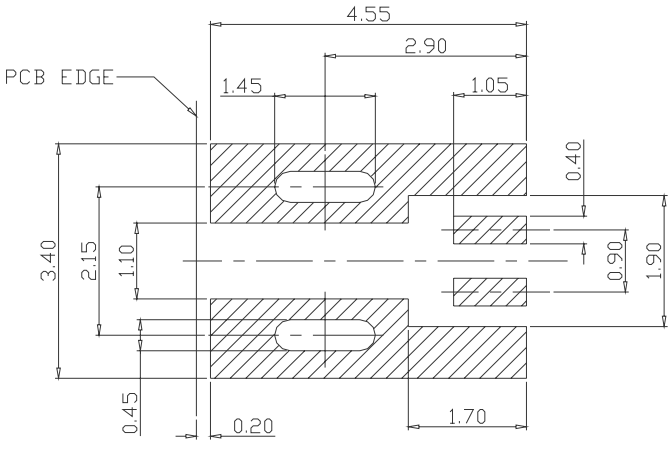

RECOMMENDED PCB LAYOUT
TOLERANCE ±0.05MM

6.RF Switch

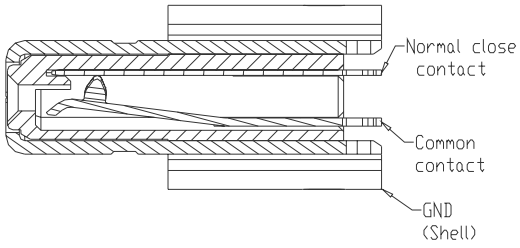

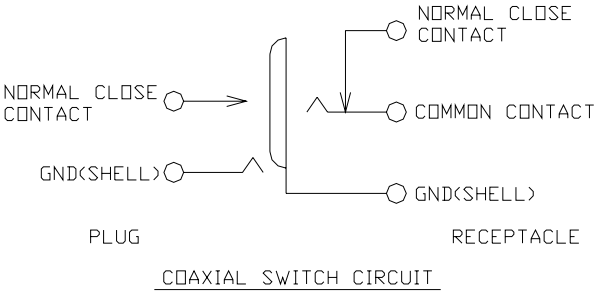

7. Package

Charge and transporting of goods will be handled with full care.

7.1 Reel Package

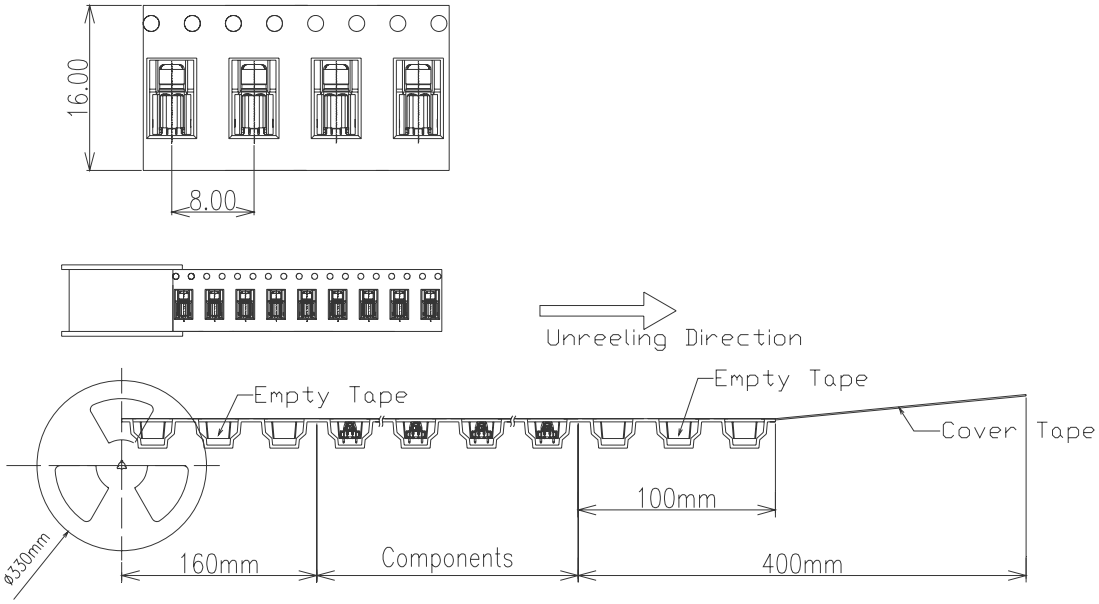

7.2 Package Details

Plastic Reel : 13" (1,800 Pcs/Reel)
BOX(mm) : 340x340x315 (18,000 Pcs/Box)

8、Storage Condition

Temperature：-40℃～+85℃
Relative Humidity：15 ～ 85 % RH
Life : Use this product within 6 months after receipt. Check the terminal solderability before use if the product bas been stored for more than 6 months.

9. Test Group

	Sample Groups							
Test Items	A	B	C	D	E	F	G	H
Visual and dimensional inspections	1,17	1,6	1,7	1,9	1,7	1,4	1,3	1,3
Insulation Resistance	2		2,5	2,7	2,5			
Contact Resistance	3,13	2,5	3,6	3,8	3,6			
Withstanding Voltage	4							
VSWR	5,14							
Insertion Loss	6,15							
Isolation	7,16							
Suitable							2	
Mating life	10							
Mechanical Shock Test		3						
Vibration and High Frequency		4						
Insertion Force of Connector	8,11							
Withdraw Force of Connector	9,12							
Humidity Steady State			4					
Temperature Cycle				6				
Life(At elevated ambient temperature)				4				
Dry cold test				5				
Salt Spray					4			
Resistance to soldering						2		
Solderability						3		
Resistance to soldering Reflow Heat								2
Number of Test Samples Min.	5	5	5	5	5	5	5	5